TABLE 1: WIRE RUN			
P1	WIRE COLOR	P2	P3
4, 5	RED	POSITIVE (+)	POSITIVE (+)
1 ,2	GREEN	NEGATIVE (-)	NEGATIVE (-)

REVISIONS			
REV.	DESCRIPTION	DATE	ENG
A	INITIAL REV.	3/16/2022	MOB
B	CHANGED P2 & P3 WIRE LENGTH	3/16/2022	MOB
C	CHANGED DIODE PN	9/22/2022	MOB

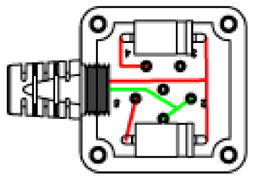

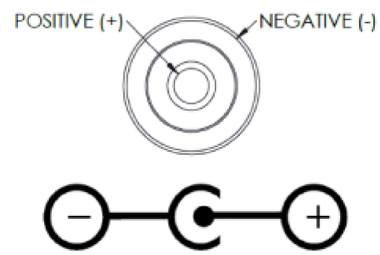

P2 & **P3** PINOUT
(MATING FACE VIEW)

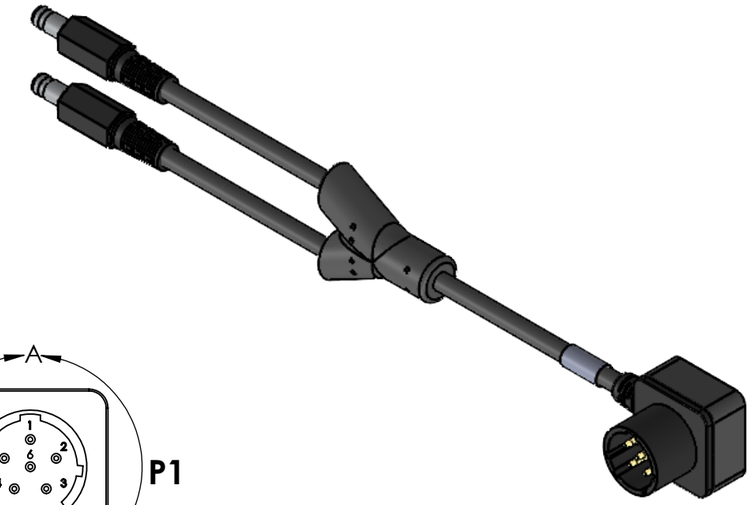

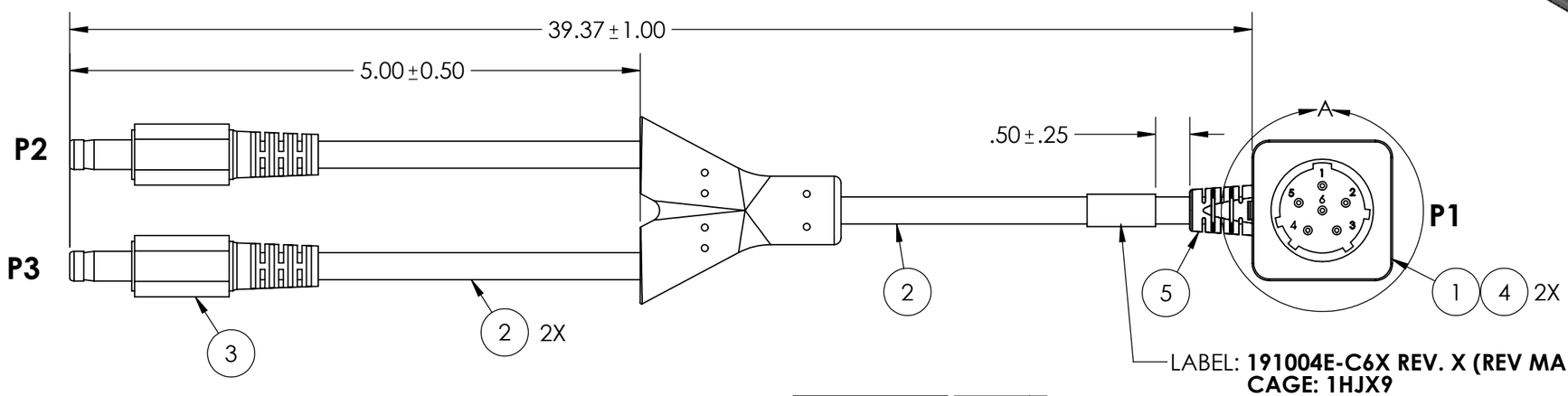

LABEL: **191004E-C6X REV. X (REV MARKING PER PO)**
CAGE: 1HJX9
MFD: MM/YY

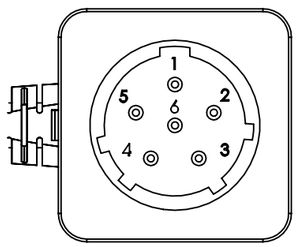

DETAIL A
P1 PINOUT
(MATING FACE VIEW)
SCALE 1.5 : 1

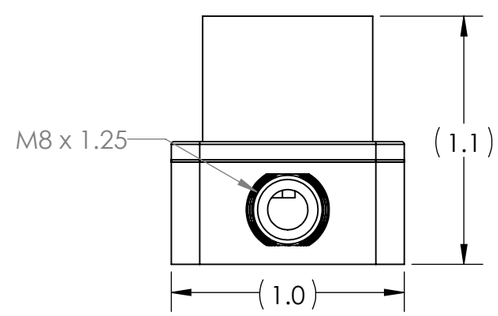

BILL OF MATERIALS			
ITEM NO.	PART NO.	QTY	NAME/DESCRIPTION
1	CONN-BA5590-MT	1	MALE BA5590 CONNECTOR W/ THREADED BACKSHELL
2	202C-U06A-0430	AR	CABLE: 2C, AWG 20, PU JACKET, OD: 4.6mm
3	TBD	2	5.5mm x 2.1mm DC BARREL PLUG, OVERMOLDED
4	SBM1060LSS_AY_00001	2	DIODE SCHOTTKY, 60V, 10A
5	SR:0024	1	M8 X1.25 THREADED STRAIN RELIEF

NOTES:
1. WIRING SHALL BE DONE IN ACCORDANCE WITH TABLE 1 WIRE RUN LIST.
2. MARKING REQUIREMENTS:
   1. LABELS SHALL BE MARKED IN ACCORDANCE WITH MIL-STD-130 AS APPLICABLE.
   2. LABELS SHALL BE WHITE WITH BLACK TEXT. REFER TO DRAWING FOR LABEL TEXT.
   3. LABELS SHALL BE PLACED WHERE SHOWN IN DRAWING.
3. SOLDERING: IAW IPC-J-STD-001 CLASS 2 AS APPLICABLE
4. ASSEMBLY TO BE 100% TESTED FOR SHORTS, CONTINUITY, AND JACKET RESISTANCE (250V @ 100MOHM MIN.)
5. MANUFACTURE AND INSPECT IAW IPC/WHMA A-620 CLASS 2.

REF. NUMBER: SN0810

UNLESS OTHERWISE SPECIFIED:
DIMENSIONS ARE IN: INCHES
TOLERANCES: .XX: ± 0.03
.XXX: ± 0.005
ANGULAR: .X°: 1°
.XX°: 0.5°
BREAK EDGES: .005 - .020
FILLETS: .005 - .020
SUFACE FINISH:
GEOMETRIC TOLERANCING PER: ASME Y14.5 -2009
MATERIAL: SEE DRAWING NOTES
FINISH: SEE DRAWING NOTES
DO NOT SCALE DRAWING

	NAME	DATE
DRAWN	MOB	03/16/22
CHECKED	RB	03/16/22
COMMENTS:		

PROPRIETARY AND CONFIDENTIAL
THE INFORMATION CONTAINED IN THIS DRAWING IS THE SOLE PROPERTY OF SUPPLYNET, INC. ANY REPRODUCTION IN PART OR AS A WHOLE WITHOUT THE WRITTEN PERMISSION OF SUPPLYNET INC. IS PROHIBITED.

CAGE CODE: 1HJX9

SupplyNet
706 EXECUTIVE BLVD.
SUITE B
VALLEY COTTAGE, NY 10989

TITLE:
BA5590 MALE BATTERY CONN. 12V WITH DIODES TO DUAL DC BARREL PLUGS

SIZE	DWG. NO.	REV
B	191004E-C6X	C

SCALE: NA | WEIGHT: | SHEET 1 OF 1